Cambridge Assessment International Education

# Cambridge International AS & A Level

| | | | | | | | | | |
|---|---|---|---|---|---|---|---|---|---|
| CANDIDATE NAME | | | | | | | | | |
| CENTRE NUMBER | | | | | | CANDIDATE NUMBER | | | | |

*3842064592*

**PHYSICS** **9702/32**

Paper 3 Advanced Practical Skills 2 **May/June 2021**

**2 hours**

You must answer on the question paper.

You will need: The materials and apparatus listed in the confidential instructions

**INSTRUCTIONS**

- Answer **all** questions.
- Use a black or dark blue pen. You may use an HB pencil for any diagrams or graphs.
- Write your name, centre number and candidate number in the boxes at the top of the page.
- Write your answer to each question in the space provided.
- Do **not** use an erasable pen or correction fluid.
- Do **not** write on any bar codes.
- You will be allowed to work with the apparatus for a maximum of 1 hour for each question.
- You should record all your observations in the spaces provided in the question paper as soon as these observations are made.
- You may use a calculator.
- You should show all your working and use appropriate units.

**INFORMATION**

- The total mark for this paper is 40.
- The number of marks for each question or part question is shown in brackets [ ].

| For Examiner's Use | |
|---|---|
| 1 | |
| 2 | |
| Total | |

This document has **12** pages. Any blank pages are indicated.


© UCLES 2021



PapaCambridge

**You may not need to use all of the materials provided.**

**1** In this experiment, you will investigate the patterns produced by overlaid grids.

**(a)** Grid A is the grid of parallel, equally spaced lines shown in Fig. 1.1.




**Fig. 1.1**

Take measurements to determine the average spacing $s_A$ between the centres of the lines on grid A.

$s_A$ = ..... mm [2]

© UCLES 2021



PapaCambridge

**(b)** You have been provided with a second grid (labelled grid B) printed on a transparent sheet.

- Place grid B on top of grid A **in Fig. 1.1**.
- Turn grid B so that there is a small angle *G* between the grids. A pattern of fringes will be produced, as shown in the example in Fig. 1.2.

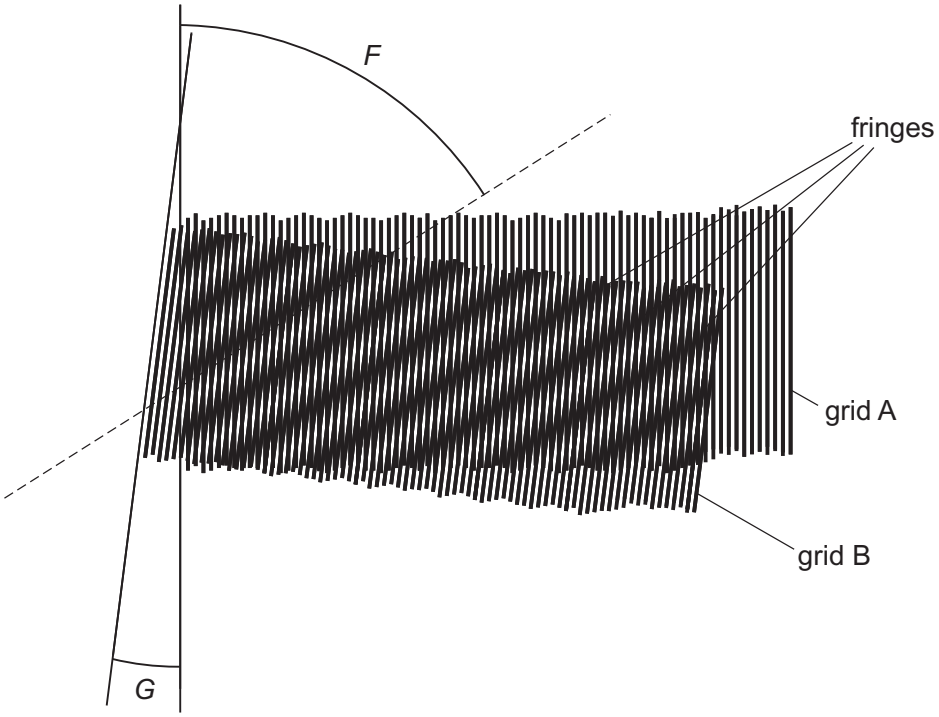


**Fig. 1.2**

- **Do not take measurements from Fig. 1.2**.

  Measure and record your value of *G* **from Fig. 1.1**.

  *G* = ..... °

- The fringes make an angle *F* with grid A, as shown in Fig. 1.2.

  Measure and record your value of *F* **from Fig. 1.1**.

  *F* = ..... °
  [1]



PapaCambridge

**(c)** Rotate grid B and repeat **(b)** until you have six sets of values of $G$ and $F$.

Use values of $G$ in the range 0° to 20°.

Record your results in a table. Include values of $\sin F$ and $\sin(F-G)$ in your table.

[8]

**(d)** **(i)** Plot a graph of $\sin(F-G)$ on the $y$-axis against $\sin F$ on the $x$-axis. [3]

**(ii)** Draw the straight line of best fit. [1]

**(iii)** Determine the gradient and $y$-intercept of this line.

gradient = .....

$y$-intercept = .....

[2]

© UCLES 2021



PapaCambridge

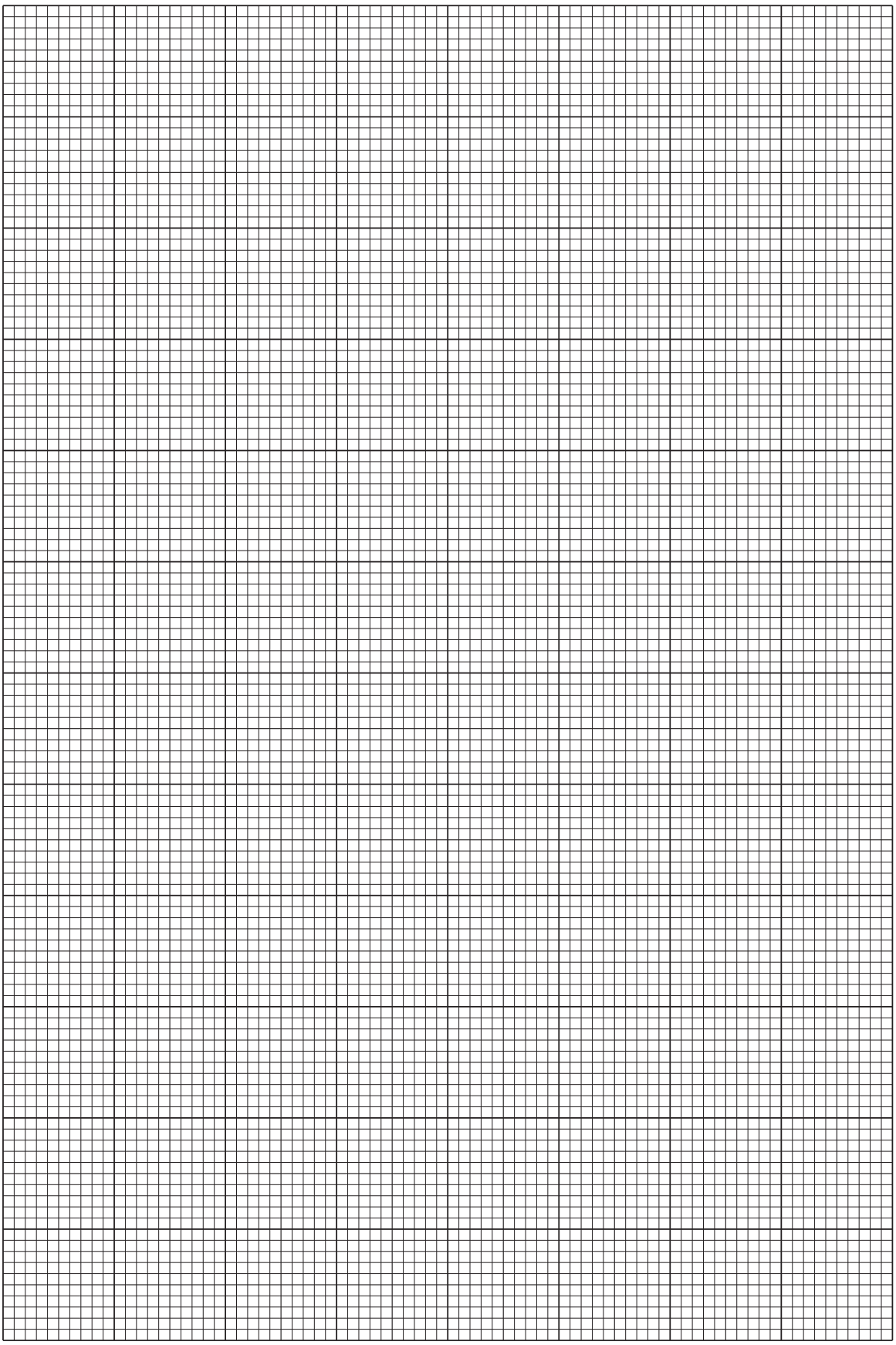

© UCLES 2021



[Turn over

PapaCambridge

**(e)** It is suggested that the quantities $F$ and $G$ are related by the equation

$$\sin(F-G) = p\sin F + q$$

where $p$ and $q$ are constants.

Use your answers in **(d)(iii)** to determine the values of $p$ and $q$.

$p$ = .....

$q$ = .....
[2]

**(f)** The constant $p$ is related to the spacing of the lines of grids A and B by

$$p = \frac{s_B}{s_A}$$

where $s_B$ is the line spacing of grid B.

Use your values of $p$ and $s_A$ to calculate $s_B$.

$s_B$ = ..... mm [1]

[Total: 20]

© UCLES 2021



PapaCambridge

**You may not need to use all of the materials provided.**

**2** In this experiment, you will investigate the oscillations of a mass on a spring.

**(a) (i)** • Set up the apparatus as shown in Fig. 2.1 using the 50 g mass hanger.

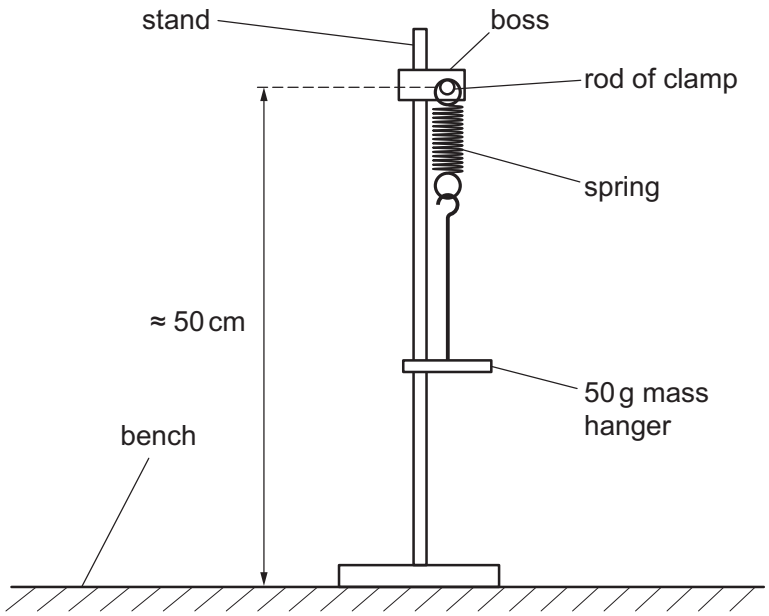


**Fig. 2.1**

- Pull the mass hanger down by approximately 1 cm. Release it so that it oscillates vertically, with no swinging motion.
- Take measurements to find the period $T_V$ of these oscillations.

$T_V$ = ..... [2]

**(ii)** • Ensure that the mass hanger has stopped moving.

- Push the mass hanger approximately 1 cm away from you. Release it so that it swings towards and away from you, with as little vertical oscillation as possible.
- Take measurements to find the period $T_S$ of these oscillations.

$T_S$ = ..... [1]

© UCLES 2021

**[Turn over**

PapaCambridge

**(b)** Repeat **(a)** with a total mass of 150 g suspended from the spring.

$T_V$ = .....

$T_S$ = .....
[2]

**(c)** It is suggested that the quantity $T_S^2 - T_V^2$ is independent of the mass suspended from the spring.

**(i)** Using your data, calculate two values of $T_S^2 - T_V^2$.

first value of $T_S^2 - T_V^2$ = .....

second value of $T_S^2 - T_V^2$ = .....
[1]

**(ii)** Justify the number of significant figures you have given for your values of $T_S^2 - T_V^2$.

.....

.....

..... [1]

© UCLES 2021



PapaCambridge

**(iii)** Explain whether your results in **(c)(i)** support the suggestion.

.....

.....

.....

..... [1]



PapaCambridge

**(d) (i)** • Remove the masses from the spring and the spring from the rod.

• Measure and record the length $x_1$ of the spring, as shown in Fig. 2.2.

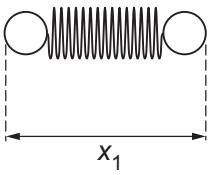


**Fig. 2.2**

$x_1$ = ..... cm [1]

**(ii)** Estimate the percentage uncertainty in your value of $x_1$. Show your working.

percentage uncertainty = ..... [1]

**(iii)** Measure and record the length $x_2$ of the mass hanger, as shown in Fig. 2.3.

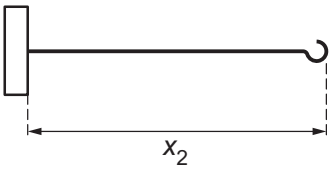


**Fig. 2.3**

$x_2$ = ..... cm [1]

**(iv)** Using your first value of $T_S^2 - T_V^2$, calculate $g$ using

$$g = \frac{4\pi^2(x_1 + x_2)}{T_S^2 - T_V^2}.$$

$g$ = ..... [1]

© UCLES 2021



PapaCambridge

**(e) (i)** Describe four sources of uncertainty or limitations of the procedure for this experiment.

1. .....

.....

2. .....

.....

3. .....

.....

4. .....

.....

[4]

**(ii)** Describe four improvements that could be made to this experiment. You may suggest the use of other apparatus or different procedures.

1. .....

.....

2. .....

.....

3. .....

.....

4. .....

.....

[4]

[Total: 20]

© UCLES 2021



PapaCambridge

**BLANK PAGE**

Permission to reproduce items where third-party owned material protected by copyright is included has been sought and cleared where possible. Every reasonable effort has been made by the publisher (UCLES) to trace copyright holders, but if any items requiring clearance have unwittingly been included, the publisher will be pleased to make amends at the earliest possible opportunity.

To avoid the issue of disclosure of answer-related information to candidates, all copyright acknowledgements are reproduced online in the Cambridge Assessment International Education Copyright Acknowledgements Booklet. This is produced for each series of examinations and is freely available to download at www.cambridgeinternational.org after the live examination series.

Cambridge Assessment International Education is part of the Cambridge Assessment Group. Cambridge Assessment is the brand name of the University of Cambridge Local Examinations Syndicate (UCLES), which itself is a department of the University of Cambridge.

© UCLES 2021



PapaCambridge